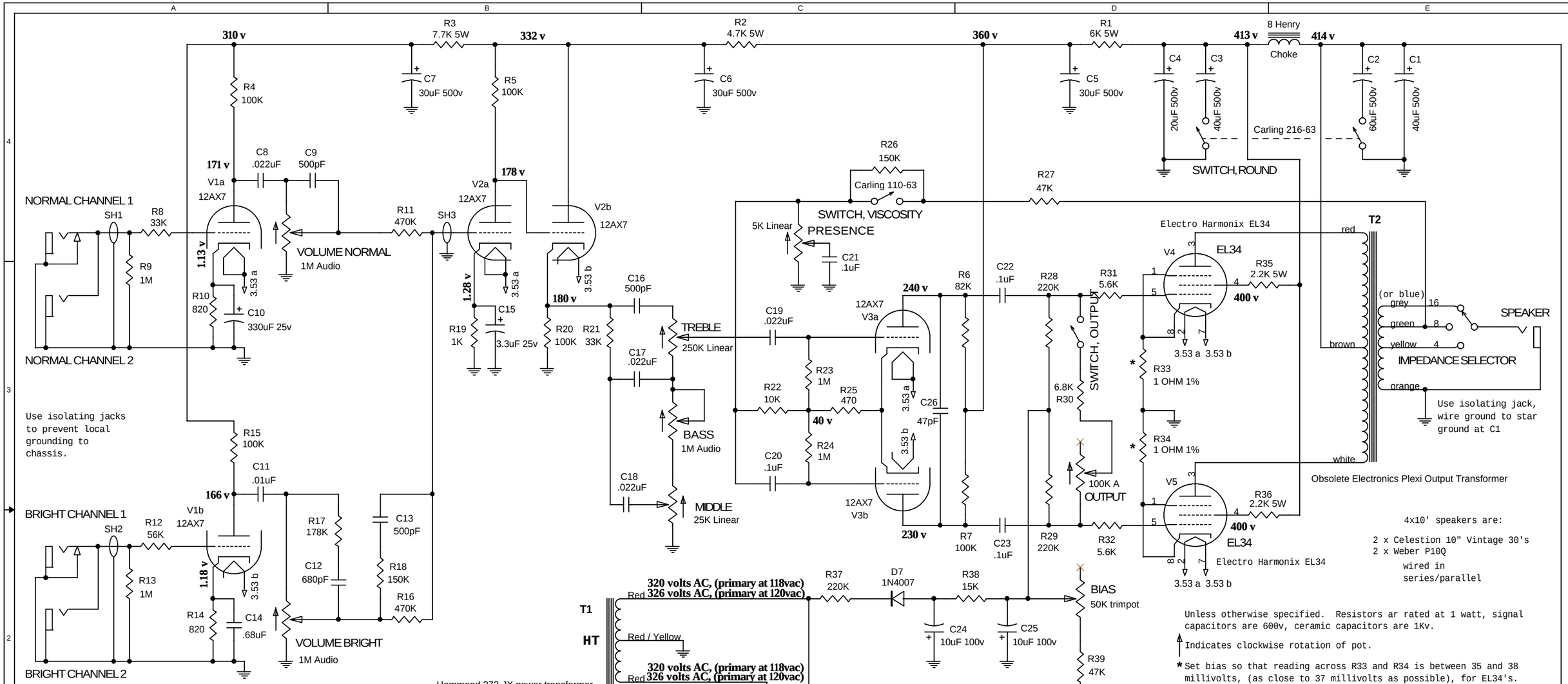


Unless otherwise specified. Resistors ar rated at 1 watt, signal capacitors are 600v, ceramic capacitors are 1Kv.

↑ Indicates clockwise rotation of pot.

* Set bias so that reading across R33 and R34 is between 35 and 38 millivolts, (as close to 37 millivolts as possible), for EL34's.

I hate Master Volumes! My "OUTPUT" control is just a defeatable post phase-inverter master volume with a restricting resistor that doesn't allow the horrible lower settings you get with master volumes.

The "NEGATIVE FEEDBACK SHIFT" switch allows either 33K or 133K of resistance in the NF circuit.

Unless otherise specified, all resistors are 1 watt, of those all are made by Riken Ohm with the exception of the resistors connecting to V1 which are tantalum film. All signal caps are Jensen paper-in-oil/copper-foil with the exception of the picofarad range which must be ceramic disk, not mica.

Note, voltage readings were taken with amp switched to solid state rectifier.

Inputs are wired so that the grid stopper resistors are connected close to the grids, grid bias resistors run straight from the grid stopper resistors to cathode ground, shielded cable runs from the input jacks to these resistors. The jacks are isolated from the chassis, their connection to ground is through the sheilding to cathode ground, then to preamp star ground.

Warning: If rectifier is switched, amp must be re-biased. Just switching the rectifier from SS to tube will drop the voltage to 405volts, but the bias voltage changes as well from, in this case, 37.8mA to 20mA. If the bias is then reset for the tube rectifier to 37.8mA, the plate voltage drops to 380volts.

## Suppliers

Carlingswitch (860)793-9281
King Amplifier Co. (925)846-1459 for the Celestion and Weber VST speakers.
Rodgers Amplifiers www.rodgersamps.com he made the 4x10 combo pine cabinet
Obsolete Electronics www.obsoleteelectronics.com for the output transformer
Angela Instruments www.angela.com for Hammond transformer, Riken Ohm resistors and paper-in-oil caps
Aiken Amplifiers www.aikenamps.com for the 2 watt Pots
Vibroworld www.vibroworld.com for the ceramic tube sockets with gold plated pins

At 120 AC, This is really 5.5 volts

At 120 AC, This is really 7.07 volts

**ALL VOLTAGE READINGS TAKEN WITH RECTIFIER SWITCHED TO TUBE, AC VOLTAGE FROM WALL RECEPTICLE AT 118 VAC.**

My goal with this amp was to recreate the tone of the best of the old Superlead 50 watt plexi Marshalls. I also wanted to have some control over the amount of headroom by either selecting tube or solid state rectification and/or reducing the filtering in the power supply. Also, I've never been happy with the shrillness of the Brilliant channel circuit of Marshall's SuperLead design so I put a lot of effort into determining the values of C11, C12, C13, R17 and R18, I finaly got it right. Lastly, I wanted to be able to lower the output so that the amp would still sound good when playing smaller clubs.

| | |
|---|---|
| DRAWN BY: JOHN KELLEY BROWN | |
| Title | 4 x 10" COMBO, PLEXI, 50 WATT |
| Size B | Document Number 03-0001-01 — Rev A0 |
| Date: Saturday, December 02, 2000 | Sheet 1 of 1 |